# 屋内照明器具特性

yamada

| 品名 | DD-3592-LL | | |
|---|---|---|---|
| 光源 | LED10.3W | | |
| 実効光束（器具光束） | 95lm | エネルギー効率 | 9.2lm/W |

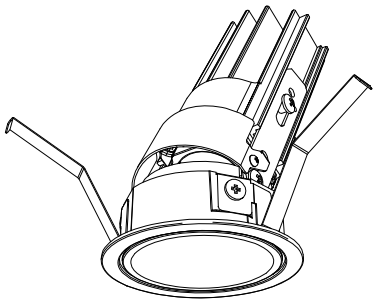

配光曲線図

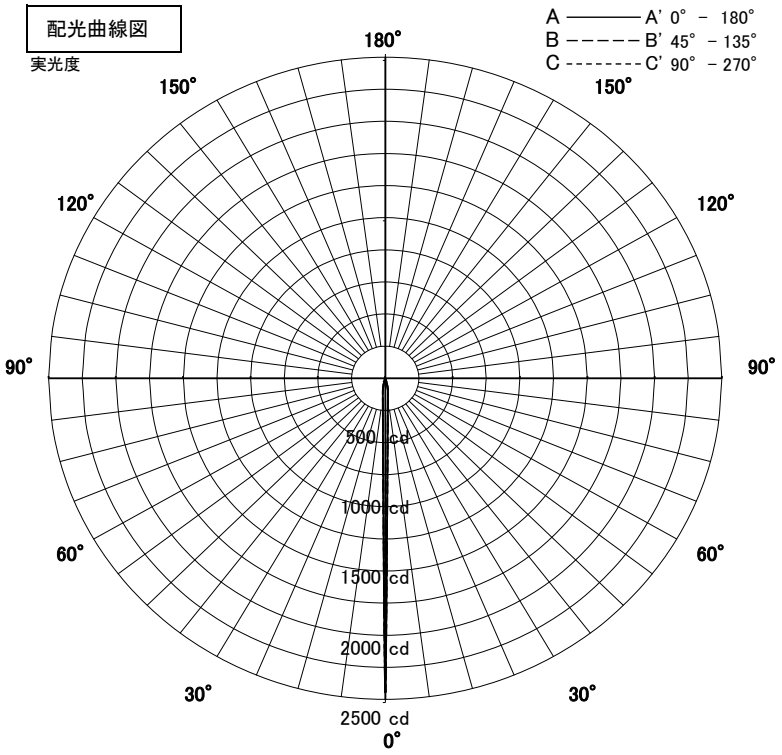


| 器具効率 | | 99.7% |
|---|---|---|
| 色温度 | | 2700K |
| 演色評価指数 | | Ra93 |
| 保守率 | 良 | 0.67 |
| | 中 | 0.63 |
| | 否 | 0.56 |

| 1/2照度角 | | |
|---|---|---|
| A－A' | 10.0 | Deg |
| C－C' | 10.0 | Deg |
| 最大取付間隔 | | |
| A－A' | 0.17 | H |
| C－C' | 0.17 | H |

1/2照度角　　直射水平面照度

単位：Lx

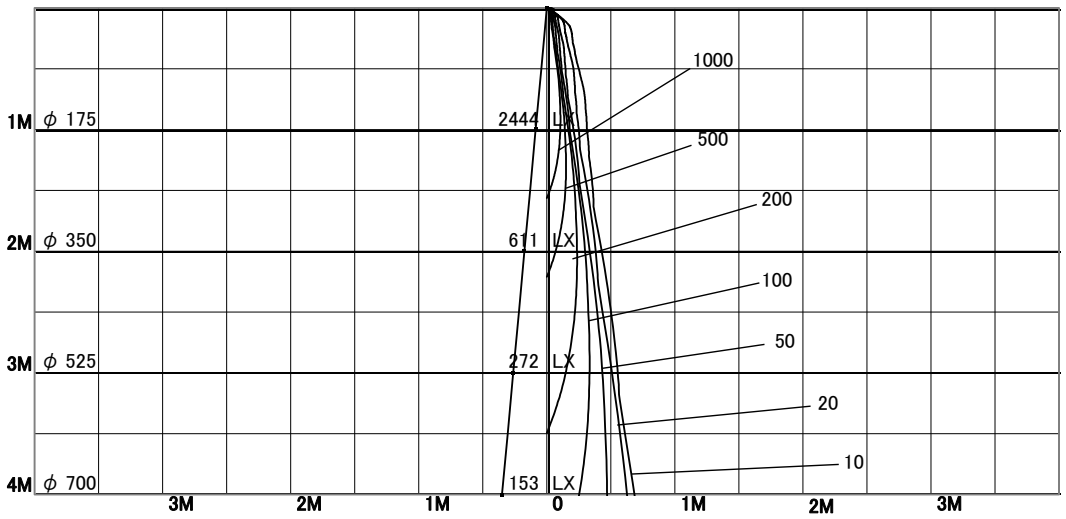


## 固有照明率表

| 天井 | 80% | | | | 70% | | | | 50% | | | | 30% | | | | 0% |
|---|---|---|---|---|---|---|---|---|---|---|---|---|---|---|---|---|---|
| 壁 | 70% | 50% | 30% | 10% | 70% | 50% | 30% | 10% | 70% | 50% | 30% | 10% | 70% | 50% | 30% | 10% | 0% |
| 床 | 10% | | | | 10% | | | | 10% | | | | 10% | | | | 0% |
| 0.60 | 28 | 26 | 25 | 24 | 28 | 26 | 25 | 24 | 27 | 26 | 25 | 24 | 27 | 26 | 25 | 24 | 23 |
| 0.80 | 30 | 28 | 27 | 26 | 29 | 28 | 27 | 26 | 29 | 27 | 26 | 26 | 28 | 27 | 26 | 25 | 25 |
| 1.00 | 31 | 29 | 28 | 27 | 31 | 29 | 28 | 27 | 30 | 29 | 28 | 27 | 30 | 29 | 28 | 27 | 27 |
| 1.25 | 32 | 31 | 30 | 29 | 32 | 31 | 30 | 29 | 31 | 30 | 29 | 29 | 31 | 30 | 29 | 28 | 28 |
| 1.50 | 33 | 32 | 31 | 30 | 33 | 31 | 30 | 30 | 32 | 31 | 30 | 30 | 31 | 31 | 30 | 29 | 29 |
| 2.00 | 34 | 33 | 32 | 32 | 34 | 33 | 32 | 31 | 33 | 32 | 32 | 31 | 32 | 32 | 31 | 31 | 30 |
| 2.50 | 35 | 34 | 33 | 33 | 34 | 34 | 33 | 33 | 34 | 33 | 33 | 32 | 33 | 33 | 32 | 32 | 31 |
| 3.00 | 35 | 35 | 34 | 34 | 35 | 34 | 34 | 33 | 34 | 34 | 33 | 33 | 34 | 33 | 33 | 33 | 32 |
| 4.00 | 35 | 35 | 35 | 34 | 35 | 35 | 34 | 34 | 34 | 34 | 34 | 34 | 34 | 34 | 33 | 33 | 33 |
| 5.00 | 36 | 35 | 35 | 35 | 35 | 35 | 35 | 35 | 35 | 35 | 34 | 34 | 34 | 34 | 34 | 34 | 33 |
| 7.00 | 36 | 36 | 36 | 36 | 36 | 36 | 35 | 35 | 35 | 35 | 35 | 35 | 34 | 34 | 34 | 34 | 33 |
| 10.00 | 36 | 36 | 36 | 36 | 36 | 36 | 36 | 36 | 35 | 35 | 35 | 35 | 34 | 34 | 34 | 34 | 34 |